milkrite | InterPuls
Improving every farm we touch

Spare parts
[001] 1050176 - Set Trascinatore L02 (10X1050011)
[002A] 1050162 - Set Slide 60/40 ALT L02 (10X1050012)
[002B] 1050170 - Set Slide 50/50 ALT L02 (10X1050015)
[002C] 1050169 - Set Slide 65/35 ALT L02 (10X1050014)
[002D] 1050168 - Set Slide 70/30 ALT L02 (10X1050013)
[003] 1050174 - Set Piastra L02 (10X1050007)
[004] 1050167 - Set Gasket X Plate L02 (10X1050008)
[005] 1050175 - Set Rondella Paramembrana L02 (20X1050009)
[006] 1090002 - Lat.Cov.L02Air R
[008] 1090003 - Lat.Cov.L02Air L
[013] 1050017 - Connection Bridge L02
[014] 1050016 - Saddle L02
[016] 1050026 - Connection Clamp InversionL02
[017] 1050024 - Inversion Body L02
[018] 1050025 - Lat.Cover Inversion L02 L02
[019] 1050023 - Inversion Pin L02
[020] 1050022 - Inversion Valve L02
[022] 1050159 - Puls Body L02 ALT/STD W/Pin
[023] 1050160 - Puls Body L02 ALT/4Exit W/Pin
[025] 1050177 - Set Coperchio L02 SS BRD ITP (10X1050056)
[029] 1050163 - Set Filter L02 (10X1050027)
[300] 1000221 - Set Screw M3,5X12 SS (25X1000023)
[325] 1000382 - Set ORing 1,80X2,80 Sil (25X1000159)
[326] 1010282 - Set Main Diaphragm (20X1010233)
[327] 1050172 - Set Main Shaft L02/L80/LL90 ALT (10X1050047)
[328] 1050165 - Set Inv.Diaphr.Pneum Puls (25X1050114)
[329] 1050173 - Set Spillo Regolazione L02 (10X1050004)
[418] 1050171 - Set Screw M4X8 PH SS (50X1050054)
[K001] 1050157 - Kit Connection Bridge L02
[K002] 1090031 - Kit Spare Parts Cop.Lat. L02/L02Air
[K004] 1050164 - Set Inversion Block L02 (5X1050116)
[S001] 1050166 - Set Kit Maint.L02 60/40 (10X1050117)
[S001] 1050117 - Kit Maint.L02 ALT 60/40
[S002] 1050118 - Kit Maint.L02 ALT 50/50 50/50
[S002] 1050178 - Set Kit Service L02 ALT 50/50 (10X1050118)
[S003] 1050179 - Set Kit Service L02 ALT 65/35 (10X1050119)

Spare parts
[S003] 1050119 - Kit Maint.L02 ALT 65/35 65/35
[S004] 1050180 - Set Kit Service L02 ALT 70/30 (10X1050120)
[S004] 1050120 - Kit Maint.L02 ALT 70/30 70/30

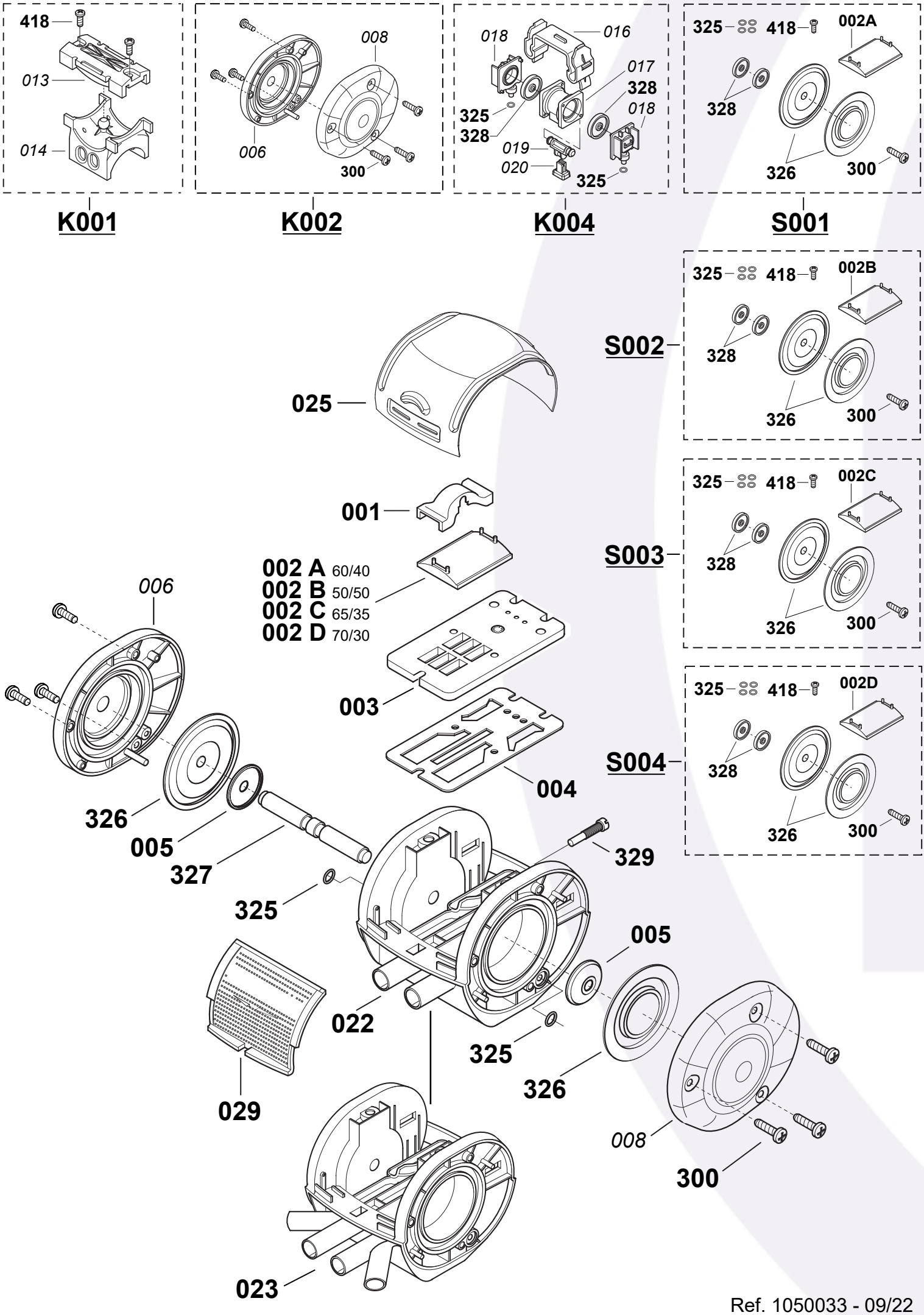

Ref. 1050033 - 09/22